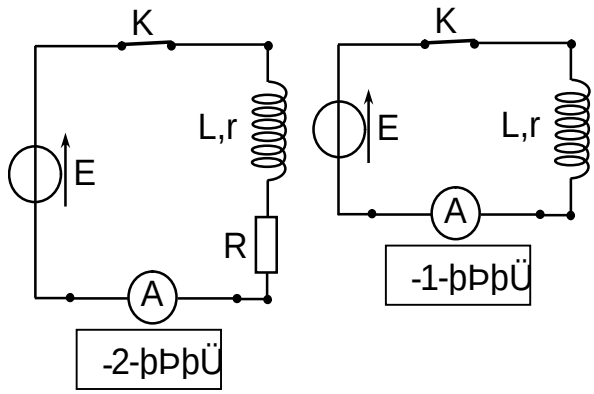
K
E
L,r
R
A
-2-
K
E
L,r
A
-1-

[illegible]

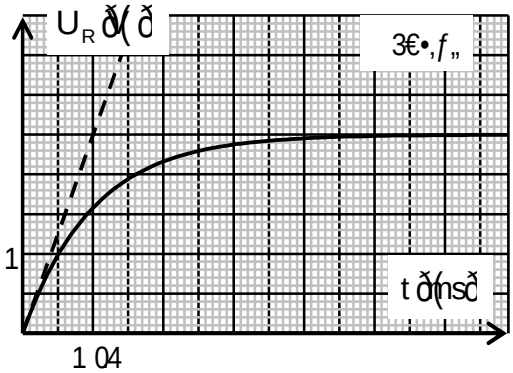

$\frac{du_R}{dt}$ ð+A.u_R(t) ðB= [illegible]

[illegible]

. [illegible]

. [illegible]

u_b ð=f (t) [illegible]

.[0 , 5 2 [illegible]

[illegible]

[illegible]

K [illegible]

.([illegible]

[illegible]

[illegible]

i ð(mA ð)	2 4	1 8	1 2	6	0
U_C ð(ð	0	3	6	9	1 2

[illegible]

[illegible]

.Fþã 2þß ' [illegible]

[illegible]

[illegible]

$\frac{dU_C}{dt}$ ð+ $\frac{1}{RC}$ U_C ð= $\frac{E}{RC}$ [illegible]

.[illegible]

[illegible]

.i ð= ð $\frac{1}{R}$ .u_C ð+ $\frac{E}{R}$ ð: [illegible]

.R<E [illegible]

$\frac{U_C}{U_R} = e^{t/\tau}$ [illegible] $U_R(t) = E e^{-t/\tau}$ [illegible]

$\frac{U_C}{U_R} = 147,413$ [illegible] $t_m = 1,175$ [illegible]

[illegible]

$\frac{t_m}{\tau}$ [illegible]

t_m [illegible]

[illegible]

([illegible] 7): [illegible]

([illegible] 7): [illegible]

[illegible] fer chimique [illegible]

[illegible]

[illegible]

[illegible] pour la science 2008 [illegible]

$M(CH_3COONa) = 82\ g/mol$ $K_e = 10^{-14}$ [illegible]

[illegible]

[illegible]

$CH_3COO^-_{(aq)} + H_2O_{(l)} \rightleftharpoons CH_3COOH_{(aq)} + OH^-_{(aq)}$

[illegible] 10^{-2} [illegible]

[illegible] 8,9 [illegible]

[illegible]

t_{f1} [illegible]

[illegible] t_{f1} [illegible]

[illegible] $C = 10^{-3}\ mol/l$

[illegible]

[illegible]

130 g [illegible]

[illegible]

[illegible] S_0 [illegible]

[illegible]

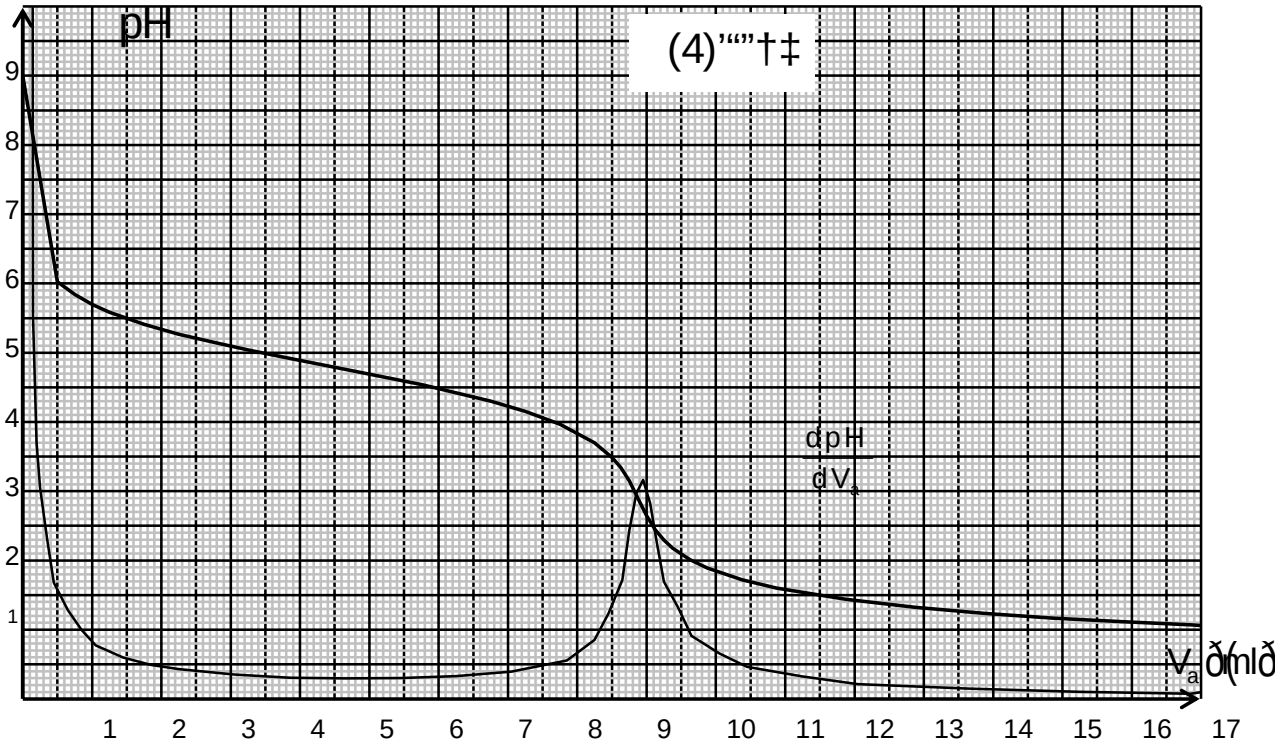
pH
(4)
9
8
7
6
5
4
3
2
1
1 2 3 4 5 6 7 8 9 10 11 12 13 14 15 16 17

[illegible]